AT2T-3041
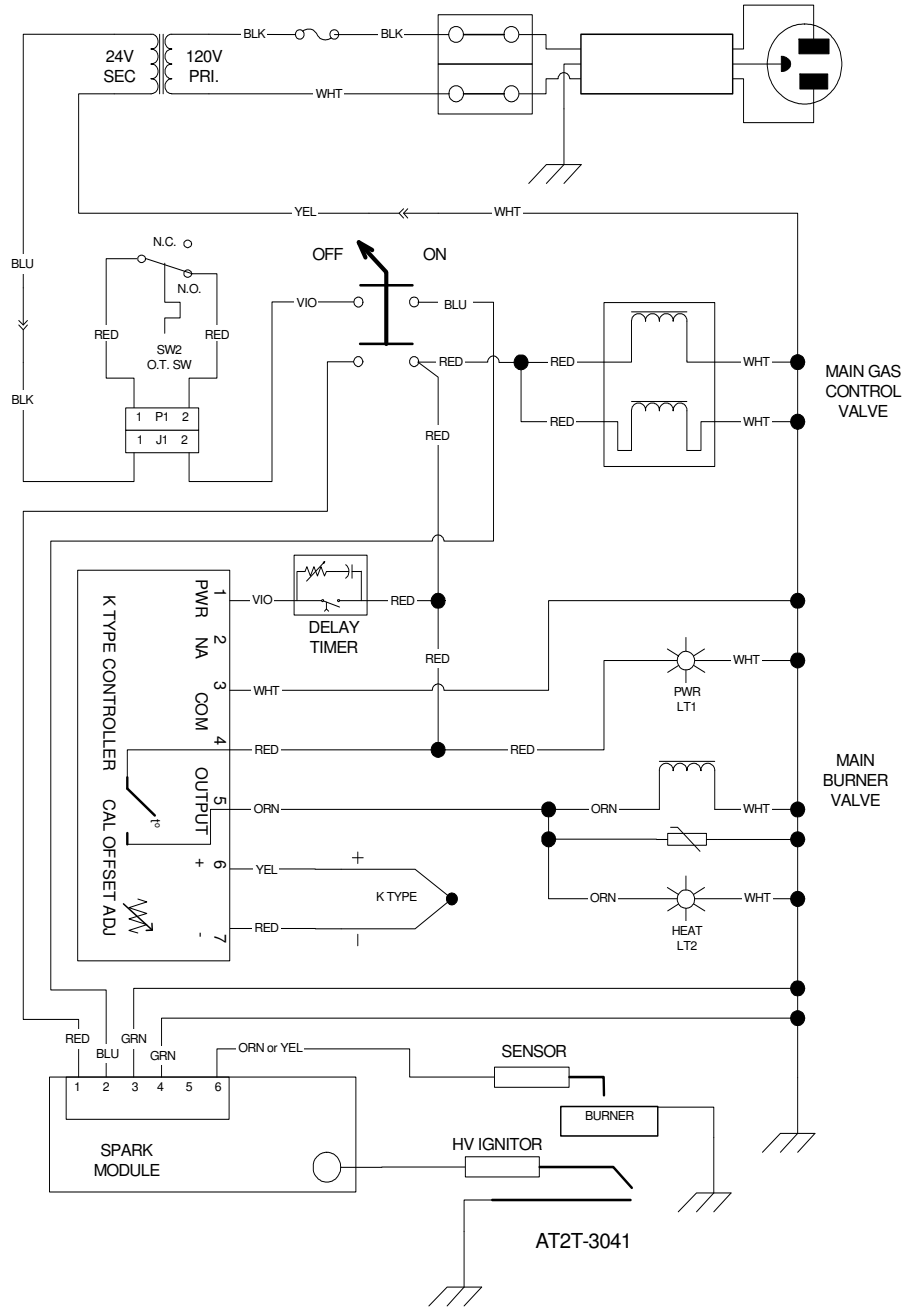
Gas Griddle Schematic EDR 083